BASIC UNIT 7

TRAVEL

UNIT 7 OBJECTIVES

Be able to:

1. Set the ETD and ETA of a resource.

ROSS DISPATCH PROCESS

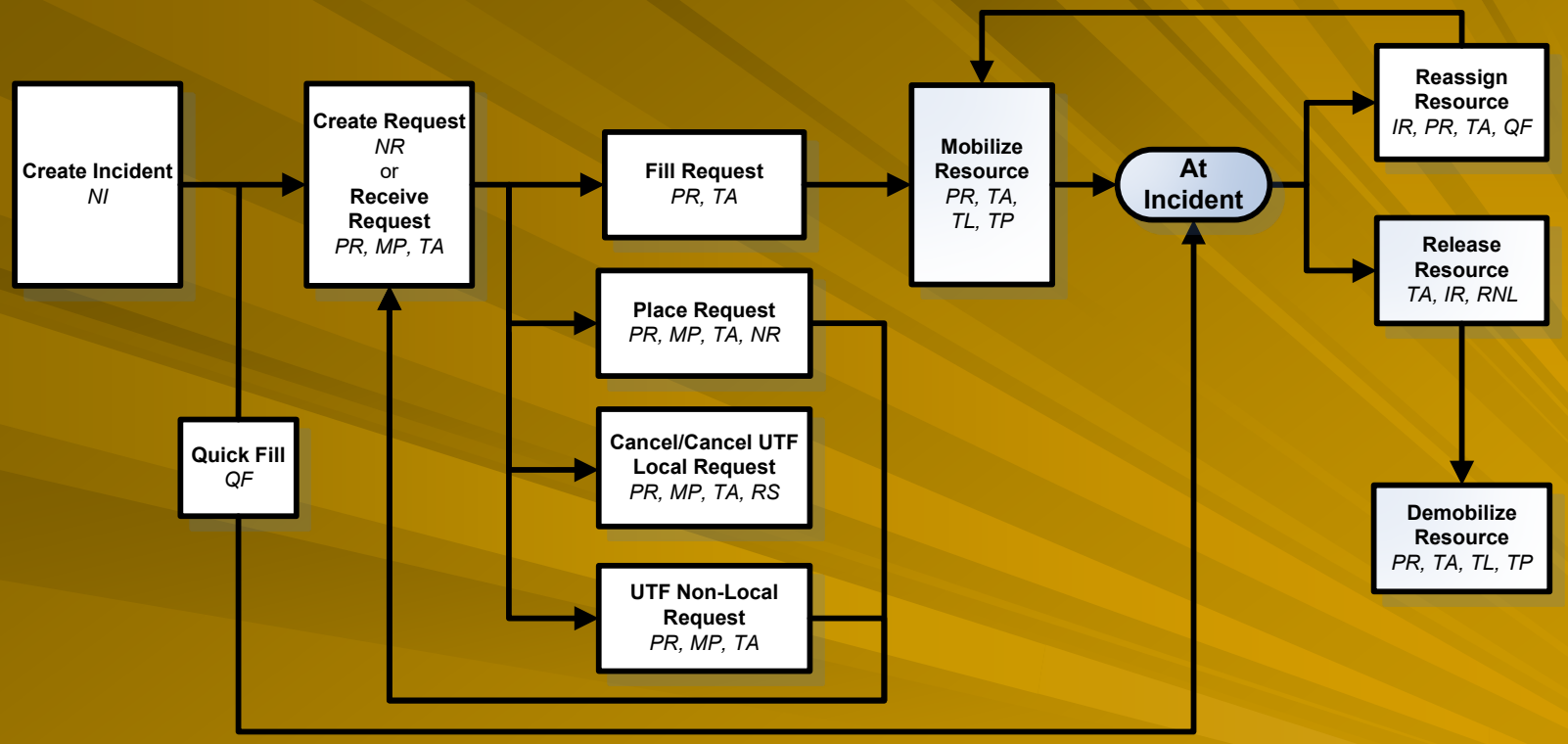

Key:

< Dispatch Action >
< ROSS Screen >

NI	=	New Incident	*RS*	=	Request Status
NR	=	New Request	*TL*	=	Travel
PR	=	Pending Request	*TP*	=	Travel Plan
MP	=	Multi Place Request	*IR*	=	Incident Resources
TA	=	Tactical Aviation	*RNL*	=	Resources (Nonlocal Inc)
QF	=	Quick Fill			

UNIT 7 OBJECTIVES REVIEW

Be able to:

1. **Set the ETD and ETA of a resource.**