BASIC UNIT 4

NEW REQUEST

UNIT 4 OBJECTIVES

Be able to:

1. Create a request.
2. Create requests from a Preorder.
3. Create a Named Request.
4. Place Up a request.
5. Place a request to an external supply cache.

GENERAL FLOW OF SCREENS

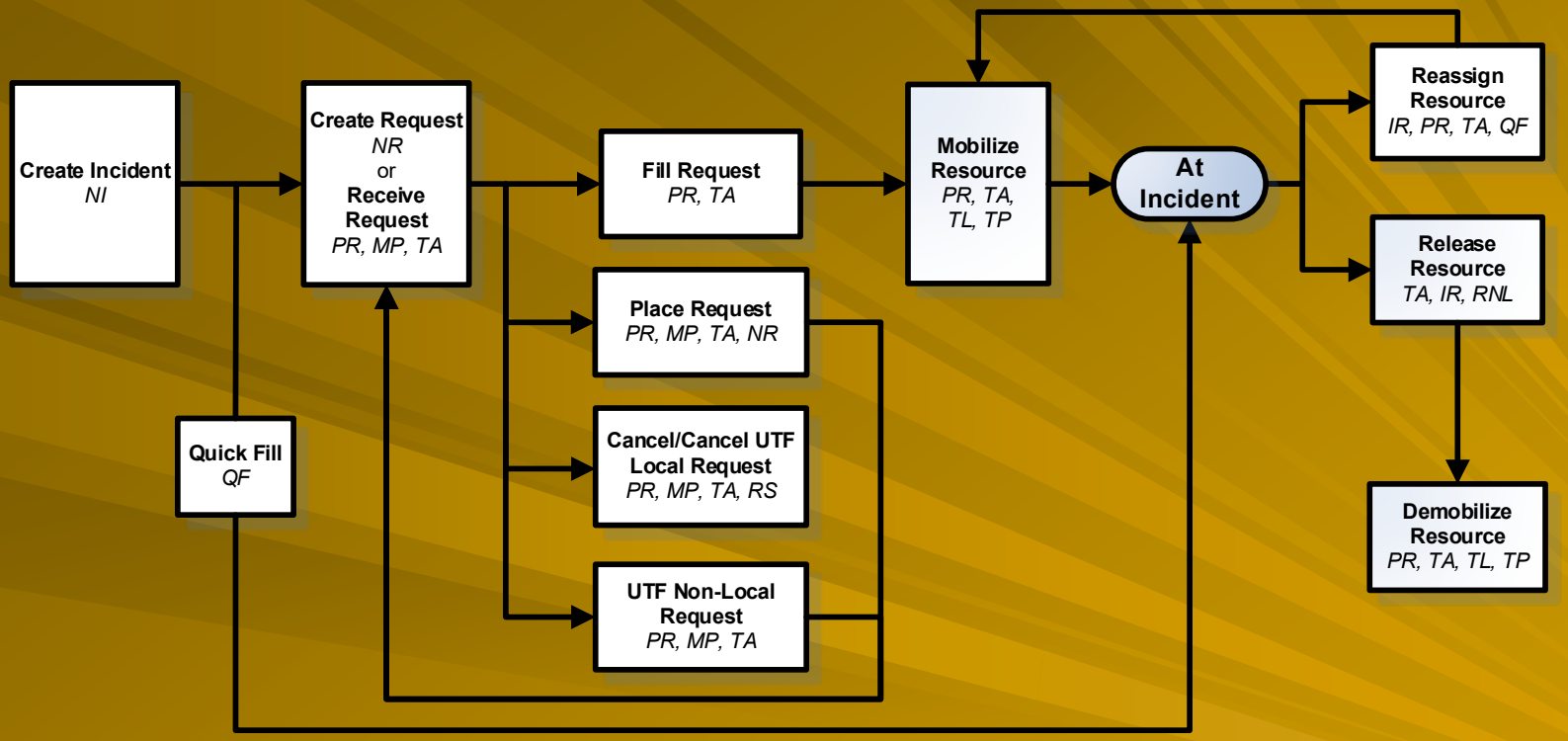

Key:

< Dispatch Action >
< ROSS Screen >

NI	=	New Incident	*RS*	=	Request Status
NR	=	New Request	*TL*	=	Travel
PR	=	Pending Request	*TP*	=	Travel Plan
MP	=	Multi Place Request	*IR*	=	Incident Resources
TA	=	Tactical Aviation	*RNL*	=	Resources (Nonlocal Inc)
QF	=	Quick Fill			

UNIT 4 OBJECTIVES REVIEW

Be able to:

1. Create a request.
2. Create requests from a Preorder.
3. Create a Named Request.
4. Place Up a request.
5. Place a request to an external supply cache.